GENERAL NOTES:

1. This Bison Mid-Density Wood Tile FS-12 Wind System is an Independent Exterior Elevated Flooring System structurally designed and tested in accordance with the Florida Building Code, Building, 9th Edition (2026), non-HVHZ regions, (FBC) and the 2024 International Building Code (IBC).
2. This Product Evaluation Document (PED) is prepared by the Product Engineer and is generic. It does not include information prepared for a specific site.
3. The Bison Mid-Density Wood Tile FS-12 Wind System is designed and tested to resist the following Design Loads used in Strength Design Load Combinations in accordance with Section 1605.1 of the FBC:
   A. System Dead Load 4 - 7 psf
   B. Superimposed Dead Load 0 - 10 psf
   Additional dead load features require additional pedestal supports and are outside the scope of these PEDs.
   C. Live Load 100 psf
   D. Positive Wind Load 60 psf
   E. Negative Wind Load - Reference General Note 4.
4. The Bison Mid-Density Wood Tile FS-12 Wind System is designed to resist uplift in accordance with the referenced codes provided the building meets the limitations of ASCE 7-22 as defined in Figures 30.3-5A (footnote 5) and 30.4-1 and the application is within the limits defined in Tables 1, 2A, 2B, 3, 4A, & 4B.
5. The wood tile paver system uplift capacity is determined based on FIU's NHERI Experimental Facility Test Report Number 2022-189e-02, Cases 7a & 7c and Design Guidelines for Roof Pavers Against Wind Uplift, ASCE/SEI Structures Congress, April 2015. This wind tunnel testing and research address the pressure equalization below the pavers and provides data and design criteria that address paver uplift in compliance with FBC Section 104.11, FBC Section 3115.4.4, and ASCE 7-22 Sections 30.1.5, 30.12, & Ch. 31.
6. For non-conforming buildings or buildings utilizing wind tunnel testing to determine uplift loads, the Design Professional of Record shall evaluate the uplift resistance considering the site specific conditions of the project or consult with the project's wind consultant.
7. This Bison Mid-Density Wood Tile FS-12 Wind System is suitable for use only with the direct involvement of the Design Professional of Record for a specific site, a Licensed Professional Engineer or Registered Architect. The Design Professional of Record shall review these document to verify the following:
   A. The design criteria as indicated herein are applicable to the site-specific conditions.
   B. Where Tables 1 or 3 are utilized to evaluate paver uplift capacity, the associated Table 1 & 3 notes are applied appropriately.
   C. Where Table 2A, 2B, 4A, or 4B are utilized to evaluate paver uplift capacity, the associated Table 2A, 2B, 4A, & 4B notes are applied appropriately.
   D. The roofing system has the capacity to support the Dead and Live loads and is compatible with the Independent Exterior Elevated Flooring System as shown herein.
8. Uplift capacity for the wood tile paver system may be evaluated utilizing Table 1 or 3 to determine the maximum height 'h' for a given Basic Wind Speed 'V' or utilizing Table 2A, 2B, 4A, or 4B to determine the maximum allowable roof component design pressures.
9. The Bison Mid-Density Wood Tile FS-12 Wind System is not intended to be part of a Ballasted Roofing System and does not shield the underlying roofing system from wind loads. The underlying roofing system shall be capable of resisting the full design wind loads as appropriate for a specific project.
10. This PED addresses the structural performance of the system. Architectural, MEP, and fire classification issues are the responsibility of the Design Professional of Record.
11. For IBC compliance, reference IBC Section 1511.9.1 for perimeter enclosure requirements and IBC Section 1511.9.2 for fire classification requirements.
12. This PED shall bear the original or digitally authenticated signature, date, and seal of John W. Knezevich, PE.
13. This PED is invalid if altered by any means.
14. This PED is the installation instructions portion of a product evaluation and shall only be used with the corresponding Product Evaluation Report.
15. Contractor shall obtain approval of the A/E of Record prior to ordering materials and coordinate material order with the approved system. Contractor shall install the paver system in compliance with this PED.

BISON MID-DENSITY WOOD TILE FS-12 WIND SYSTEM NOTES:

1. Wood tile pavers shall be 1-11/16 thick ± 1/16" at the perimeter with a minimum weight of 4 psf.
2. Wood tiles shall be constructed using wood with a specific Gravity ranging from 0.80 to 1.1 with a minimum ASD bending strength, Fb = 1,600 psi or a modulus of rupture of 15,000 psi when tested in accordance with ASTM D198. Wood tiles shall be constructed in accordance with the details shown herein.
3. All wood tile pavers shall have a continuous perimeter kerf cut to accommodate the required spline. Kerf cuts in wood tiles shall be a maximum of 0.16" high and 0.78" wide, unless noted otherwise.
4. Typical wood tile size shall be a minimum of 14" x 14" and a maximum of 24" x 72". Rectangular and irregular shaped pavers within these sizes are acceptable provided the member sizes and spacing shown in Detail D1 are maintained.
5. At perimeter rows, discontinuous edges, or atypical locations such as diagonal or curved perimeters, a minimum paver dimension of 8" shall be maintained and the paver shall be engaged by a perimeter ledger support..
6. Wood tiles shall be placed in stack bond or parquet (basket weave) pattern. Wood tile pavers with a length to width ratio greater than or equal to 2:1 may be placed in a running bond pattern.
7. All wood tile pavers shall be continuously supported at the perimeter of the installation and all discontinuous interior edges with the ledger support details shown herein.
8. A solid parapet or curb with a minimum height at least flush with the finished pavers is required at the perimeter and discontinuous edges of paver installations.
9. Wood tile pavers shall be installed with a 3/16" gap between pavers and a maximum gap of 3/16" between edge paver and perimeter constraint. Spacers shall be used to control the gap.
10. Wood tile pavers shall be installed with a cavity height between the bottom of pavers and the top of the underlying roof surface of no less than 1/2" and no more than 18".
11. Pedestal support system shall be either the Screwjack, Versadjust, or Level.It pedestal assemblies shown herein with a minimum weight of 0.4 psf.
12. Pedestal shall be placed at a maximum spacing of 24" o.c. each way and at all paver intersections with additional pedestals installed as required to support atypical conditions. Reference Bison installation instructions.
13. Pedestals and FS-12 spline shall be fabricated from Bison's B-PP-2025 polypropylene copolymer with a minimum tensile strength at yield in accordance with ASTM D638 of 3,200 psi loaded at 0.2"/min and a minimum flexural modulus in accordance with ASTM D790 of 275 ksi. B-PP-2025 subjected to 4,500 hours of accelerated weathering in accordance with ASTM G155 shall exhibit less than a 10% change in yield strength.
14. All paver joint intersections shall utilize the FS-12 spline and screw detail shown herein to connect adjacent pavers and fasten to the pedestals. For atypical conditions, reference Layout Diagram shown herein.
15. Screws used for connecting the FS-12 spline to the pedestals shall be Bison FS-Trim Screws. Full screw diameter shall penetrate the pedestal a minimum of 1/8".
16. For installations within 3,000 feet of a saltwater coastline, screws and ledger fasteners shall be stainless steel complying with FBC Section 1711.1.1.
17. Installation of the paver tile system shall comply with Bison's installation instructions and this PED.

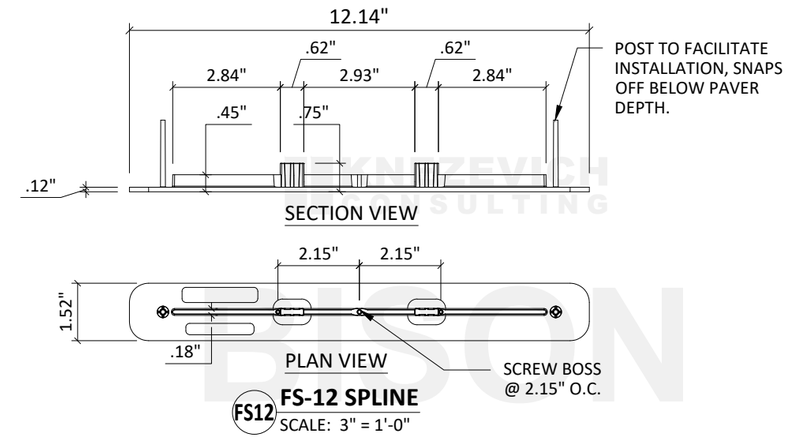

FS12 **FS-12 SPLINE**
SCALE: 3" = 1'-0"

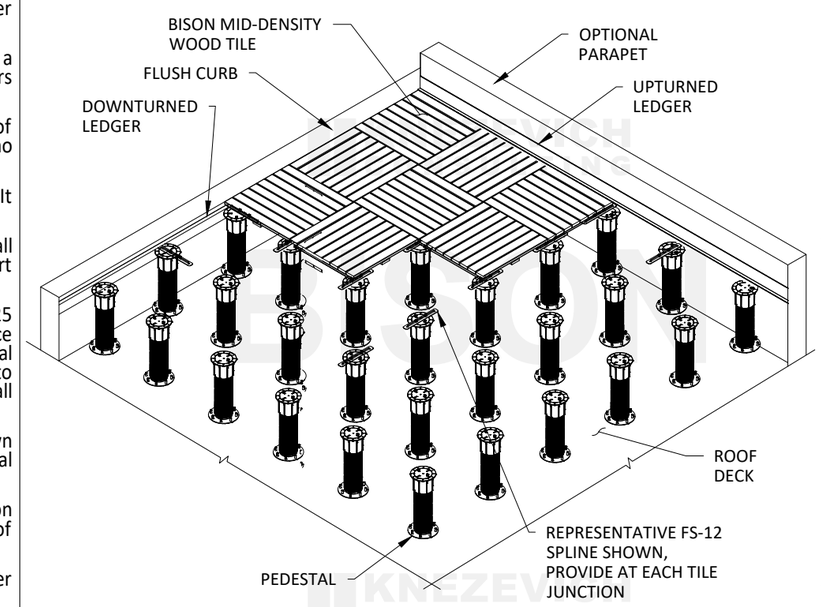

F1 **BISON MID-DENSITY WOOD TILE FS-12 WIND SYSTEM ISOMETRIC**
NTS

J.W. KNEZEVICH LICENSE NO. 41961 STATE OF FLORIDA PROFESSIONAL ENGINEER
09/29/2026

KNEZEVICH CONSULTING
KNEZEVICH CONSULTING, LLC
1600 S. Federal Hwy., Suite 961
Pompano Beach, FL 33062
T 954.772.6224 * COA 27988
www.knezevich.com

Copyright © 2026 Knezevich Consulting, LLC

Bison Mid-Density Wood Tile FS-12 Wind System

Client/Manufacturer: **Bison Innovative Products**
701 Osage Street
Bldg 2 #120
Denver, CO 80204
T: 800-333-4234

Revisions

No.	Date	By	Descripton
0	09/25/2026	JWK	FBC 2026 Update, formerly KC25-0114

Scale: AS NOTED
Drawn by: JWK
Date: 09/25/2026

J.W. Knezevich
Professional Engineer
FL License No. PE 41961

This item has been digitally signed and sealed by John W. Knezevich, PE on the date adjacent to the seal.
Digitally signed by John W. Knezevich
Signature must be verified on any electronic copies.

Drawing No.
KC26-0424
sheet 1 of 6

ACCEPTABLE PEDESTAL MODELS & COMPONENTS

VB BASE LEVELER
SCREWJACK, VERSADJUST

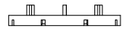

HD50 1/2" PEDESTAL
SCREWJACK, VERSADJUST, LEVEL.IT

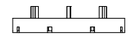

HD75 3/4" PEDESTAL
SCREWJACK, VERSADJUST, LEVEL.IT

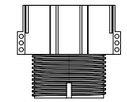

C4 4" COUPLER
SCREWJACK, LEVEL.IT

INTERCHANGABLE PEDESTAL COMPONENTS

SCALE: 1.5" = 1'-0"

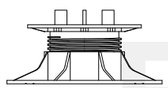

B2 2" - 3" VERTICAL RANGE

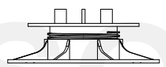

B1 1-1/4" - 2" VERTICAL RANGE

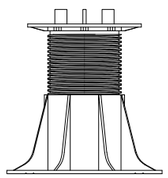

B4 4-3/4" - 7-3/4" VERTICAL RANGE

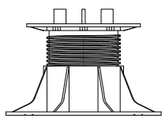

B3 3" - 4-3/4" VERTICAL RANGE

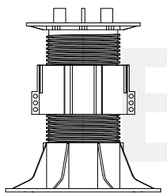

B3 + C4 7-3/4" - 9" VERTICAL RANGE

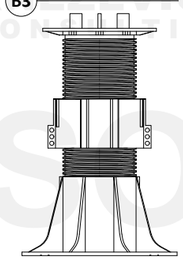

B4 + C4 9" - 12" VERTICAL RANGE
ADD ADDITIONAL C4 AS NEEDED FOR 12" TO 18" RANGE

SCREWJACK PEDESTAL COMPONENTS

SCALE: 1.5" = 1'-0"

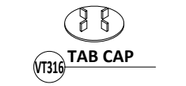

VT316 TAB CAP

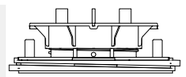

V1 2-1/4" - 2-3/4" VERTICAL RANGE

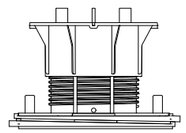

V3 3-3/4" - 5-3/4" VERTICAL RANGE

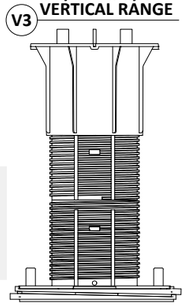

V4 + VC2 9" - 13" VERTICAL RANGE COUPLER ADDS 4"
ADD ADDITIONAL VC2 AS NEEDED FOR 13" - 18" RANGE

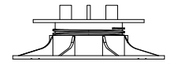

LO 1-1/4 - 2" VERTICAL RANGE

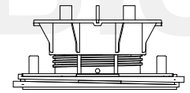

V2 2-3/4" - 3-3/4" VERTICAL RANGE

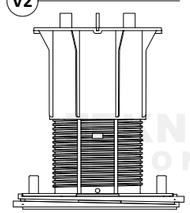

V4 5-3/4" - 9" VERTICAL RANGE

VC2 4" COUPLER

VERSADJUST PEDESTAL COMPONENTS

SCALE: 1.5" = 1'-0"

LT316 TAB CAP

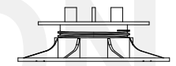

LO 1-1/4" - 2" VERTICAL RANGE

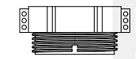

C1 2" COUPLER

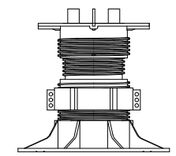

LC + C1 4-3/4" - 6-1/4" VERTICAL RANGE

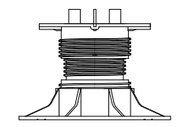

LC 2" - 4-3/4" VERTICAL RANGE

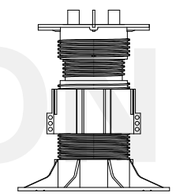

LC + C4 6-1/4" - 8-3/4" VERTICAL RANGE
ADD ADDITIONAL C4 FOR 12" RANGE

LEVEL.IT PEDESTAL COMPONENTS

SCALE: 1.5" = 1'-0"

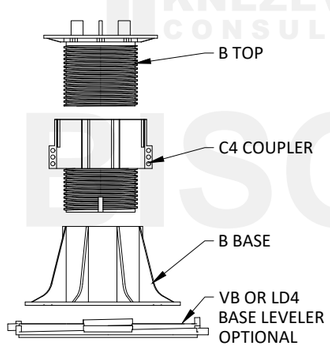

1 SCREWJACK PEDESTAL ASSEMBLY
SCALE: 1.5" = 1'-0"

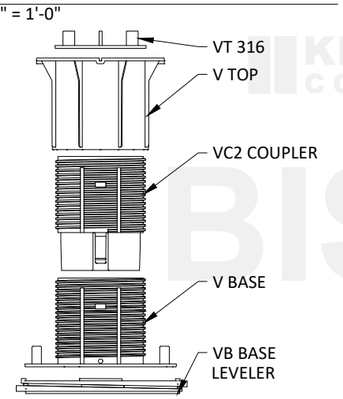

2 VERSADJUST PEDESTAL ASSEMBLY
SCALE: 1.5" = 1'-0"

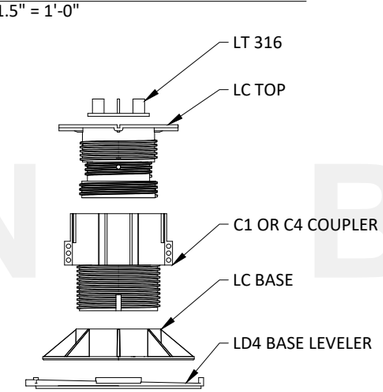

3 LEVEL.IT PEDESTAL ASSEMBLY
SCALE: 1.5" = 1'-0"

J.W. KNEZEVICH
LICENSE
NO. 41961
STATE OF
FLORIDA
PROFESSIONAL ENGINEER
09/29/2026

KNEZEVICH CONSULTING
KNEZEVICH CONSULTING, LLC
1600 S. Federal Hwy., Suite 961
Pompano Beach, FL 33062
T 954.772.6224 * COA 27988
www.knezevich.com
Copyright © 2026 Knezevich Consulting, LLC

Bison Mid-Density Wood Tile
FS-12 Wind System

Client / Manufacturer:
Bison Innovative Products
701 Osage Street
Bldg 2 #120
Denver, CO 80204
T: 800-333-4234

Revisions

No.	Date	By	Descripton
0	09/25/2026	JWK	FBC 2026 Update, formerly KC25-0114

Scale: AS NOTED
Drawn by: JWK
Date: 09/25/2026

J.W. Knezevich
Professional Engineer
FL License No. PE 41961

This item has been digitally signed and sealed by John W. Knezevich, PE on the date adjacent to the seal.

Signature must be verified on any electronic copies.

Drawing No.
KC26-0424
sheet 2 of 6

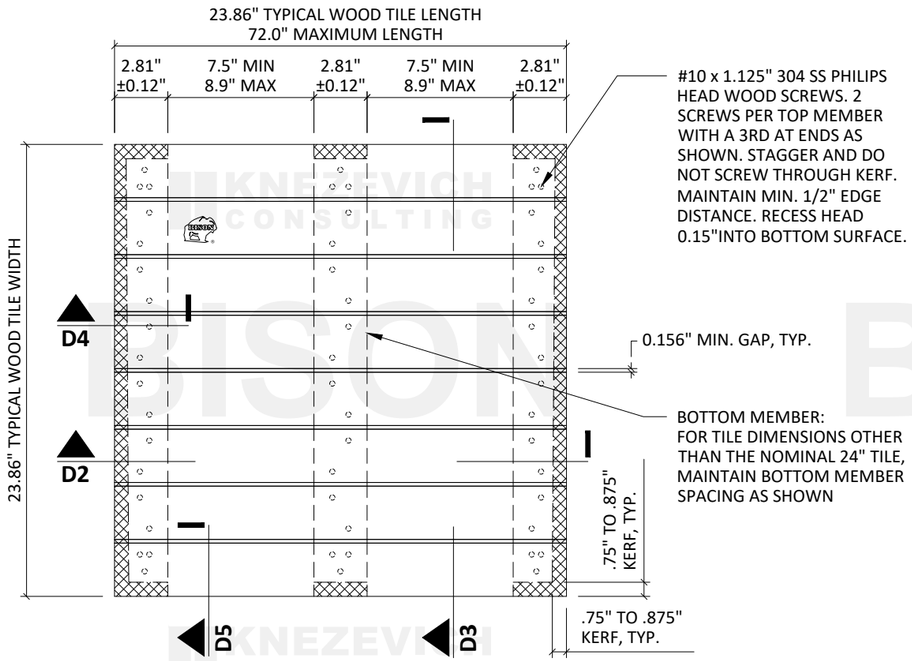

D1 BISON WOOD TILE - TOP VIEW
SCALE: 1.5" = 1'-0"

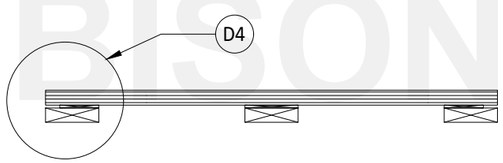

D2 BISON WOOD TILE - SIDE VIEW 1
SCALE: 1.5" = 1'-0"

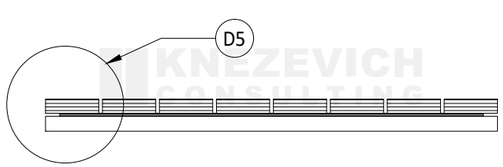

D3 BISON WOOD TILE - SIDE VIEW 2
SCALE: 1.5" = 1'-0"

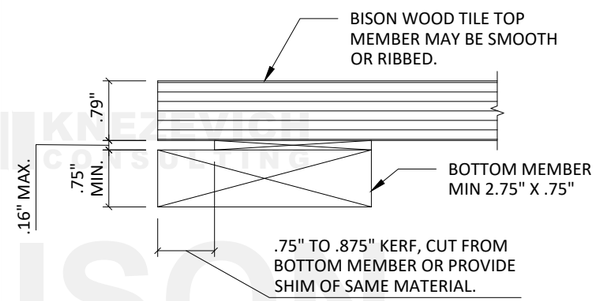

D4 BISON WOOD TILE - EDGE 1
SCALE: 6" = 1'-0"

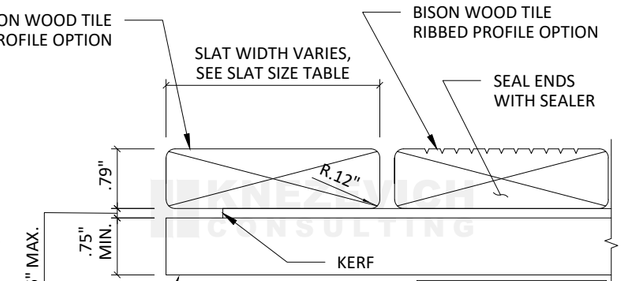

SLAT SIZE TABLE	
# OF SLATS	SLAT WIDTH
6	3.85"
7	3.24"
8	2.81"
9	2.46"

D5 BISON WOOD TILE - EDGE 2
SCALE: 6" = 1'-0"

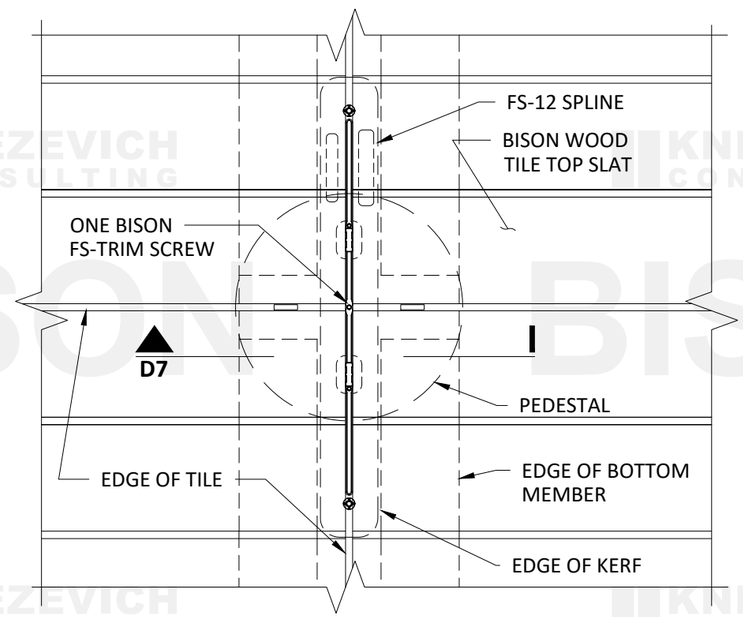

D6 FS-12 SPLINE CONNECTION - PLAN VIEW
SCALE: 3" = 1'-0"

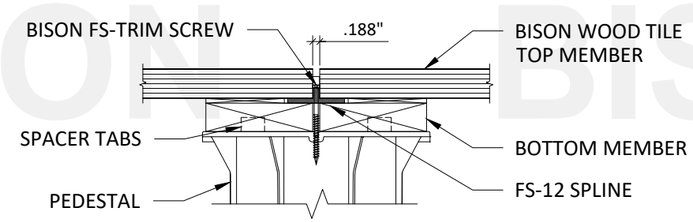

D7 FS-12 SPLINE CONNECTION - SECTION
SCALE: 3" = 1'-0"

J.W. KNEZEVICH LICENSE NO. 41961 STATE OF FLORIDA PROFESSIONAL ENGINEER
09/29/2026

KNEZEVICH CONSULTING
KNEZEVICH CONSULTING, LLC
1600 S. Federal Hwy, Suite 961
Pompano Beach, FL 33062
T 954.772.6224 * COA 27988
www.knezevich.com
Copyright © 2026 Knezevich Consulting, LLC

Bison Mid-Density Wood Tile
FS-12 Wind System

Client / Manufacturer: **Bison Innovative Products**
701 Osage Street
Bldg 2 #120
Denver, CO 80204
T: 800-333-4234

Revisions

No.	Date	By	Descripton
0	09/25/2026	JWK	FBC 2026 Update, formerly KC25-0114

Scale: AS NOTED
Drawn by: JWK
Date: 09/25/2026

J.W. Knezevich
Professional Engineer
FL License No. PE 41961

This item has been digitally signed and sealed by John W. Knezevich, PE on the date adjacent to the seal.

Signature must be verified on any electronic copies.

Drawing No.
KC26-0424
sheet 3 of 6

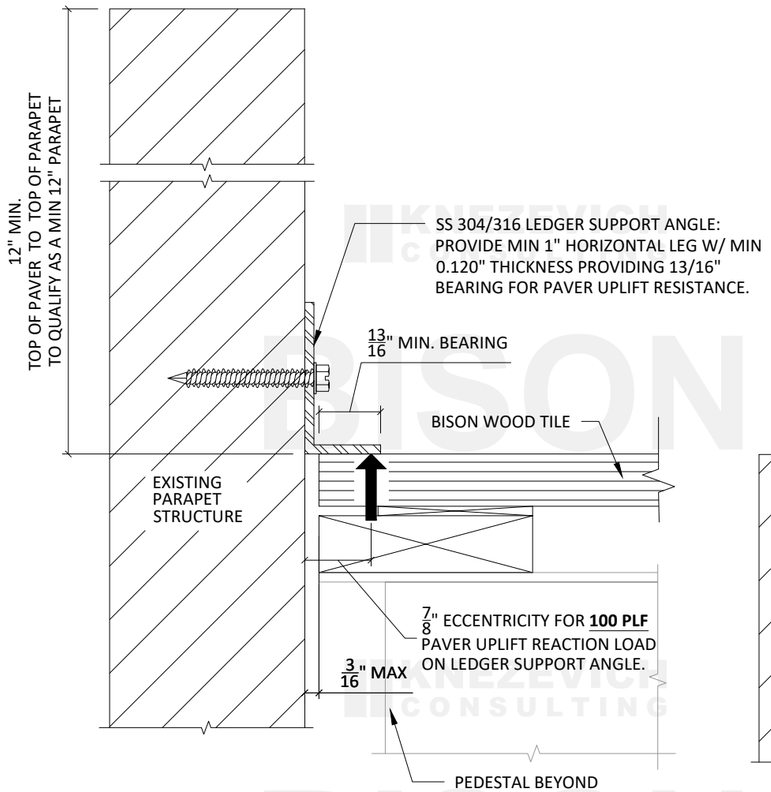

D8 UPTURNED LEDGER SUPPORT @ MIN 12-INCH PARAPET
SCALE: 6" = 1'-0"

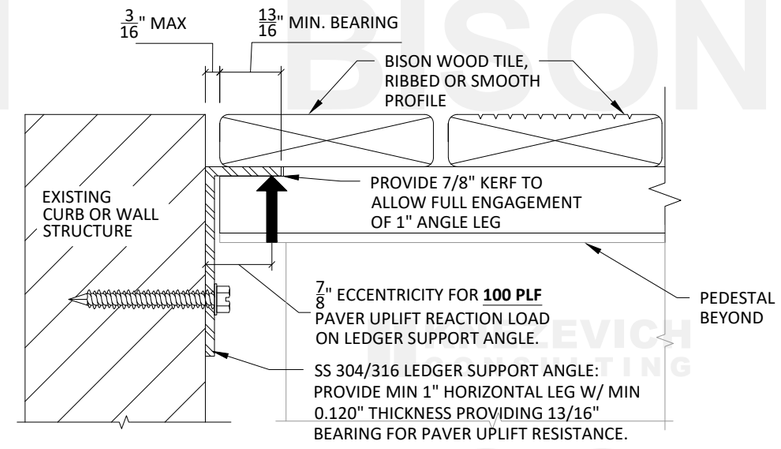

D9 DOWNTURNED LEDGER SUPPORT @ FLUSH PARAPET OR CURB
SCALE: 6" = 1'-0"

LEDGER SUPPORT NOTES:

1. Pavers shall be supported at all discontinuous edges with a ledger as shown.
2. Ledger support element may be upturned or downturned at all locations.
3. Connections to parapets or curbs are outside the scope of these Product Evaluation Documents as parapet and curb conditions vary considerably. Design Professional of Record shall design the connections to parapet or curb and verify the parapet or curb is designed to resist a superimposed load as designated on the ledger support details with consideration for the moment induced by the eccentricity of the superimposed load.
4. Ledger anchorage shall be designed by the Design Professional of Record to support the USD superimposed load shown accounting for tension to resist rotation due to the eccentricity shown.
5. Alternative support details are acceptable provided the minimum engagement of the paver in bearing is provided.
6. Uplift on the top surface of the parapet or curb is in addition to the applied uplift load.
7. Loads are USD factored loads.
8. Fasten angle directly to structure, not through finishes except for maximum 1/8" thick flashing materials. Where fasteners penetrate waterproofing, architect shall provide for waterproofing of penetrations.
9. Splice ledger support as needed. Butt ends at splice and provide minimum 2 fasteners per piece. Provide first and last fastener a maximum of 3" horizontally from end of angle.

J.W. KNEZEVICH
LICENSE
NO. 41961
STATE OF
FLORIDA
PROFESSIONAL ENGINEER
09/29/2026

KNEZEVICH CONSULTING
KNEZEVICH CONSULTING, LLC
1600 S. Federal Hwy., Suite 961
Pompano Beach, FL 33062
T 954.772.6224 * COA 27988
www.knezevich.com
Copyright © 2026 Knezevich Consulting, LLC

Bison Mid-Density Wood Tile
FS-12 Wind System

Client / Manufacturer:
Bison Innovative Products
701 Osage Street
Bldg 2 #120
Denver, CO 80204
T: 800-333-4234

Revisions

No.	Date	By	Descripton
0	09/25/2026	JWK	FBC 2026 Update, formerly KC25-0114

Scale: AS NOTED
Drawn by: JWK
Date: 09/25/2026

J.W. Knezevich
Professional Engineer
FL License No. PE 41961

This item has been digitally signed and sealed by John W. Knezevich, PE on the date adjacent to the seal.

Signature must be verified on any electronic copies.

Drawing No.
KC26-0424
sheet 4 of 6

Bison Mid-Density Wood Tile FS-12 Wind System

FLUSH PARAPET CONDITION
TABLES FOR USE WITH FLUSH OR 12-INCH PARAPET CONDITIONS

Table 1: ASCE 7-22

Max Height vs Wind Speed			
Basic Wind Speed 'V' (mph)	Maximum Height 'h' (feet)		
	Exp B	Exp C	Exp D
≤ 95	500	458	269
≤ 100	500	277	149
≤ 105	427	171	85
≤ 110	301	108	49
≤ 115	216	70	29
≤ 120	157	46	18
≤ 130	86	21	N.A.
≤ 140	49	N.A.	N.A.
≤ 150	29	N.A.	N.A.
≤ 160	18	N.A.	N.A.
> 160	N.A.	N.A.	N.A.

Table 2A: ASCE 7-22; Mean Roof Height ≤ 60 feet

Allowable Uplift Wind Pressures				
USD / ASD	Zone 1'	Zone 1	Zone 2	Zone 3
USD	-36.3 psf	-63.1 psf	-83.3 psf	-113.5 psf
ASD	-21.8 psf	-37.9 psf	-50.0 psf	-68.1 psf

Table 2B: ASCE 7-22; Mean Roof Height > 60 feet

Allowable Uplift Wind Pressures				
USD / ASD	Zone 1'	Zone 1	Zone 2	Zone 3
USD	NA	-53.1 psf	-83.3 psf	-113.5 psf
ASD	NA	-31.8 psf	-50.0 psf	-68.1 psf

12-INCH PARAPET CONDITION
TABLES FOR USE WITH 12-INCH PARAPET CONDITION ONLY

Table 3: ASCE 7-22

Max Height vs Wind Speed			
Basic Wind Speed 'V' (mph)	Maximum Height 'h' (feet)		
	Exp B	Exp C	Exp D
≤ 95	500	500	500
≤ 100	500	500	420
≤ 105	500	415	240
≤ 110	500	263	140
≤ 115	425	170	84
≤ 120	309	112	51
≤ 130	169	51	20
≤ 140	97	24	N.A.
≤ 150	57	N.A.	N.A.
≤ 160	35	N.A.	N.A.
≤ 170	22	N.A.	N.A.
> 170	N.A.	N.A.	N.A.

Table 4A: ASCE 7-22; Mean Roof Height ≤ 60 feet

Allowable Uplift Wind Pressures				
USD / ASD	Zone 1'	Zone 1	Zone 2	Zone 3
USD	-43.4 psf	-75.6 psf	-99.8 psf	-136.0 psf
ASD	-26.1 psf	-45.4 psf	-59.9 psf	-81.6 psf

Table 4B: ASCE 7-22; Mean Roof Height > 60 feet

Allowable Uplift Wind Pressures				
USD / ASD	Zone 1'	Zone 1	Zone 2	Zone 3
USD	NA	-63.6 psf	-99.8 psf	-136.0 psf
ASD	NA	-38.1 psf	-59.9 psf	-81.6 psf

TABLE 1 & 3 NOTES:

1. The 'V' and 'h' limits provided in Table 1 & 3 are based upon the following:
   A. Basic Wind Speed 'V' is determined based on Risk Category and local requirements.
   B. Exposure Category "B", "C", or "D" is determined based on location and local requirements.
   C. Roof deck surfaces are consistent with monoslope roofs ≤ 3 degrees.
   D. Building is an enclosed building with GCpi = 0.18. The system is not rated for open, partially enclosed, or partially open buildings.
   E. Site conditions, and shape and location of host building are representative of a Topographic Factor, Kzt = 1.0, a Ground Elevation Factor, Ke ≤ 1.0, and a Directionality Factor Kd = 0.85.
3. For N.A. values, the paver system is not adequate at any height 'h' for the noted Exposure and Wind Speed 'V'.
4. Values of 'h' or 'V' beyond those shown in Table 1 are outside the scope of these documents.

TABLE 2A, 2B, 4A, & 4B NOTES:

1. As an alternative to the Velocity vs Height values in Table 1 or 3, allowable uplift pressure for roof zones 1', 1, 2, & 3 as shown in Tables 2A, 2B, 4A, & 4B may be utilized provided the building and component wind load calculations comply with the criteria below. For clarity, both USD and ASD allowable uplift pressures are provided.
   A. Basic Wind Speed is determined based on Risk Category and local requirements.
   B. Exposure Category "B", "C", or "D" is determined based on location and local requirements.
   C. Building is an enclosed building with GCpi = 0.18. The system is not rated for open, partially enclosed, or partially open buildings.
   D. Topographic Factor, Kzt as required for local conditions.
   E. Effective Wind Area = 10 square feet.
   F. Directionality Factor, Kd = 0.85
   G. Ground Elevation Factor, Ke as permitted for local conditions.
   H. Parapet Height = 0 or 1 ft. Load ratings are not applicable for loads reduced due to parapet height.
   I. Roof deck surfaces are consistent with monoslope roofs ≤ 3 degrees.
   J. Mean Roof Height ≤ 60 feet with GCp from Figure 30.3-2A (see Figure 30.3-5A, footnote 5) and reference Table 2A or 4A for Allowable Uplift Wind Pressures.
   K. Mean Roof Height > 60 feet with GCp from Figure 30.4-1 and reference Table 2B or 4B for Allowable Uplift Wind Pressures.
2. The allowable uplift pressures noted herein shall be greater than a building's roof component design pressures.

12-INCH PARAPET CONDITION NOTES:

1. Tables 3, 4A, & 4B are only applicable when the following conditions are met:
   A. A minimum 12" high parapet is required at the perimeter of paver area unless the perimeter is more than 15 feet from a building edge.
   B. Flush curb conditions are acceptable at interior discontinuous edges provided the discontinuous edge is more than 15 feet from a building edge.
   C. Flush curb conditions at doors are acceptable at all interior areas.

J.W. KNEZEVICH LICENSE NO. 41961 STATE OF FLORIDA PROFESSIONAL ENGINEER
09/29/2026

KNEZEVICH CONSULTING
KNEZEVICH CONSULTING, LLC
1600 S. Federal Hwy., Suite 961
Pompano Beach, FL 33062
T 954.772.6224 * COA 27988
www.knezevich.com
Copyright © 2026 Knezevich Consulting, LLC

Bison Mid-Density Wood Tile FS-12 Wind System

Client / Manufacturer: Bison Innovative Products
701 Osage Street
Bldg 2 #120
Denver, CO 80204
T: 800-333-4234

Revisions

No.	Date	By	Descripton
0	09/25/2026	JWK	FBC 2026 Update, formerly KC25-0114

Scale: AS NOTED
Drawn by: JWK
Date: 09/25/2026

J.W. Knezevich
Professional Engineer
FL License No. PE 41961

This item has been digitally signed and sealed by John W. Knezevich, PE on the date adjacent to the seal.

Signature must be verified on any electronic copies.

Drawing No.
KC26-0424
sheet 5 of 6

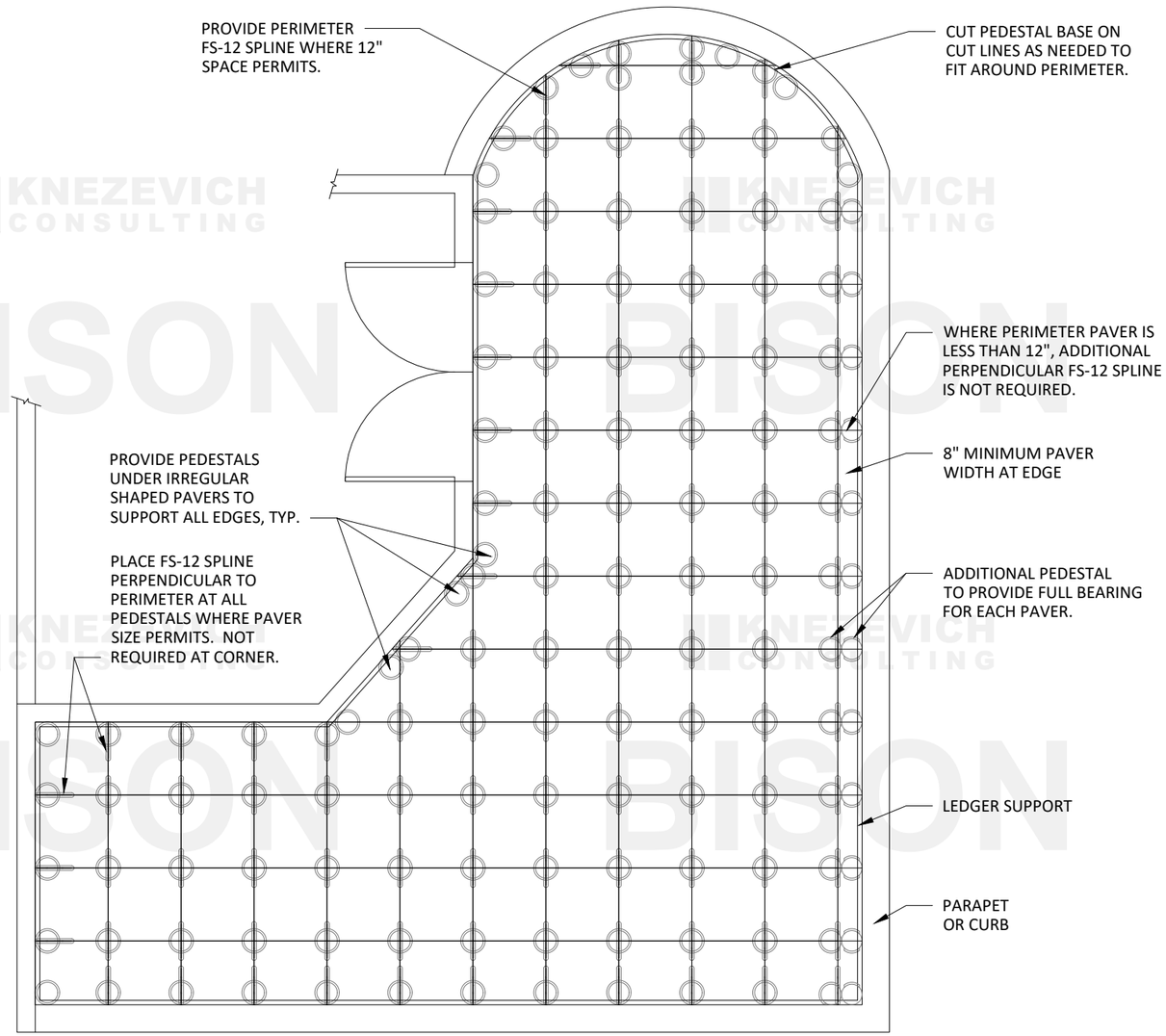

D10 **BISON MID-DENSITY WOOD TILE FS-12 WIND SYSTEM LAYOUT DIAGRAM**
SCALE: 1/4" = 1'-0"

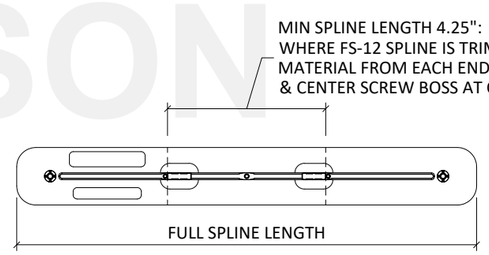

D11 **FS-12 SPLINE TRIM POINTS**
SCALE: 3" = 1'-0"

J.W. KNEZEVICH
LICENSE
NO. 41961
STATE OF FLORIDA
PROFESSIONAL ENGINEER
09/29/2026

KNEZEVICH CONSULTING

KNEZEVICH CONSULTING, LLC
1600 S. Federal Hwy., Suite 961
Pompano Beach, FL 33062
T 954.772.6224 * COA 27988
www.knezevich.com

Copyright © 2026 Knezevich Consulting, LLC

Bison Mid-Density Wood Tile
FS-12 Wind System

Client / Manufacturer:
Bison Innovative Products
701 Osage Street
Bldg 2 #120
Denver, CO 80204
T: 800-333-4234

Revisions

No.	Date	By	Descripton
0	09/25/2026	JWK	FBC 2026 Update, formerly KC25-0114

Scale: AS NOTED
Drawn by: JWK
Date: 09/25/2026

J.W. Knezevich
Professional Engineer
FL License No. PE 41961

This item has been digitally signed and sealed by John W. Knezevich, PE on the date adjacent to the seal.

Signature must be verified on any electronic copies.

Drawing No.
KC26-0424
sheet 6 of 6